SERVICE

533 0097 10

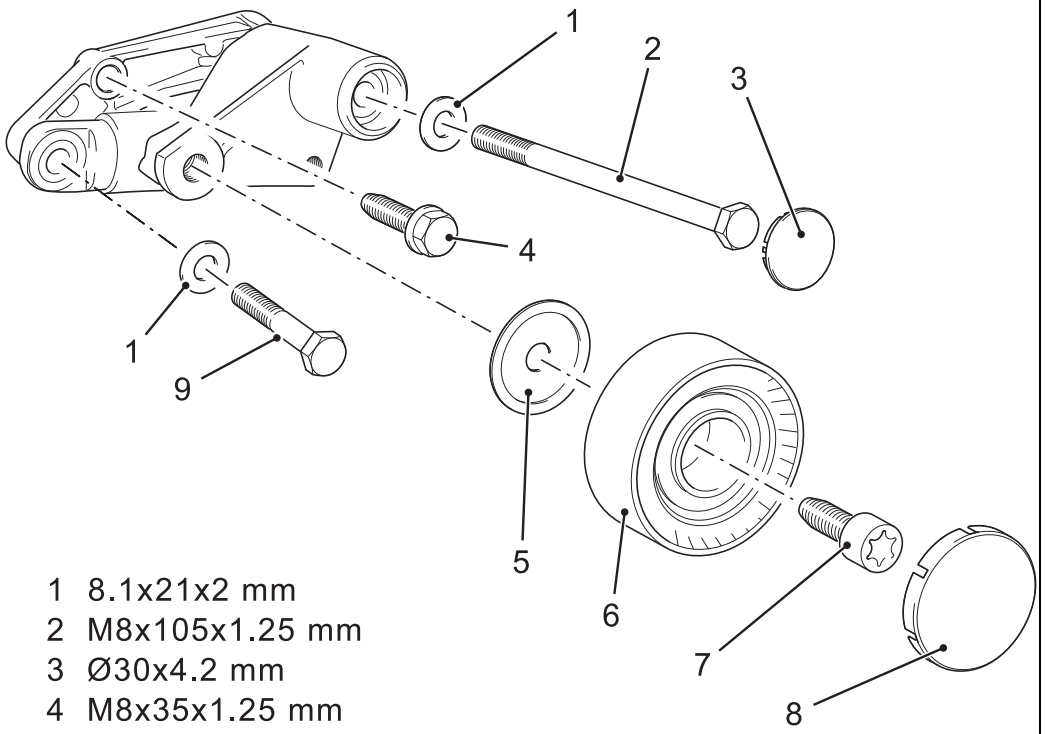

1 8.1x21x2 mm
2 M8x105x1.25 mm
3 Ø30x4.2 mm
4 M8x35x1.25 mm
5 10.2x40x1.5 mm
6 Ø70x24 mm
7 M10x25x1.5 mm
8 Ø55x5 mm
9 M8x50x1.25 mm

999 6004 920 © 2013 www.Schaeffler-Aftermarket.com