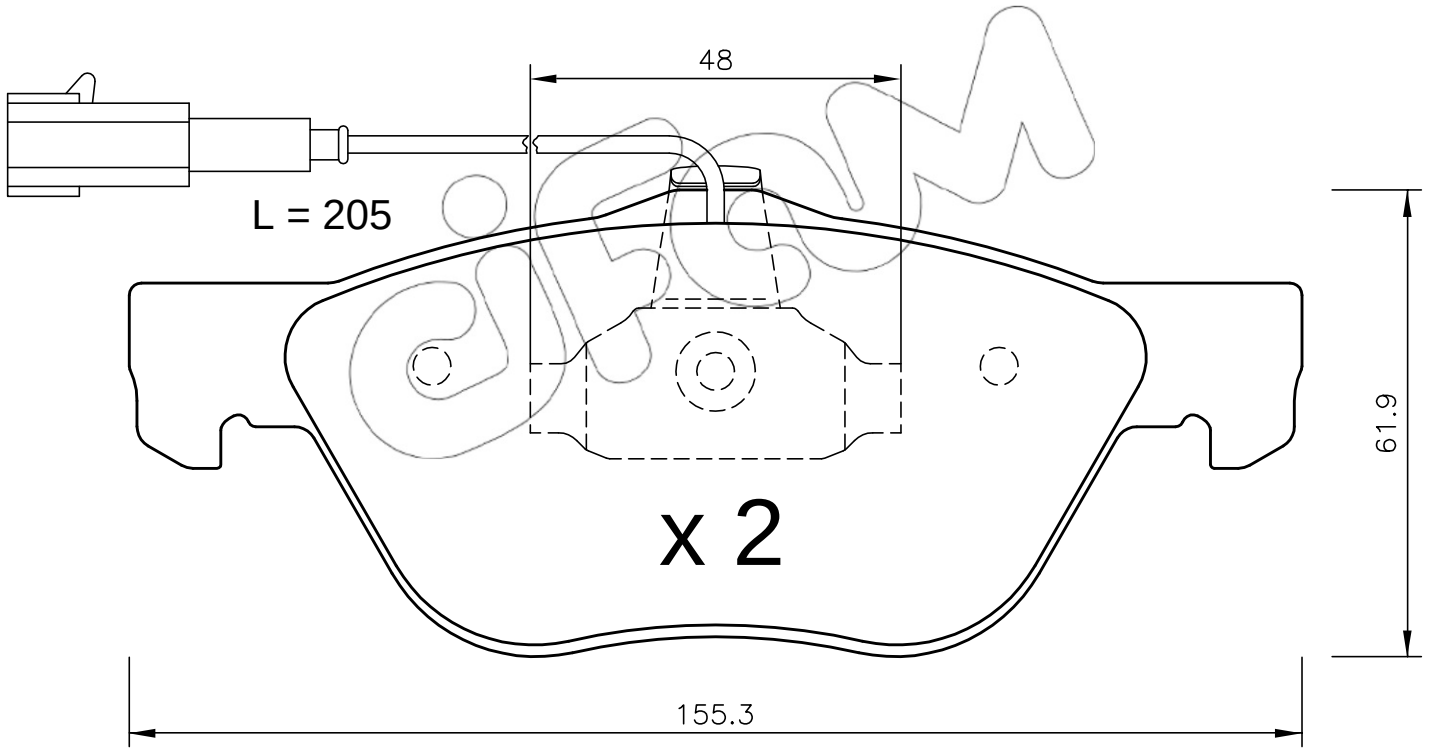
48
L = 205
61.9
x 2
155.3

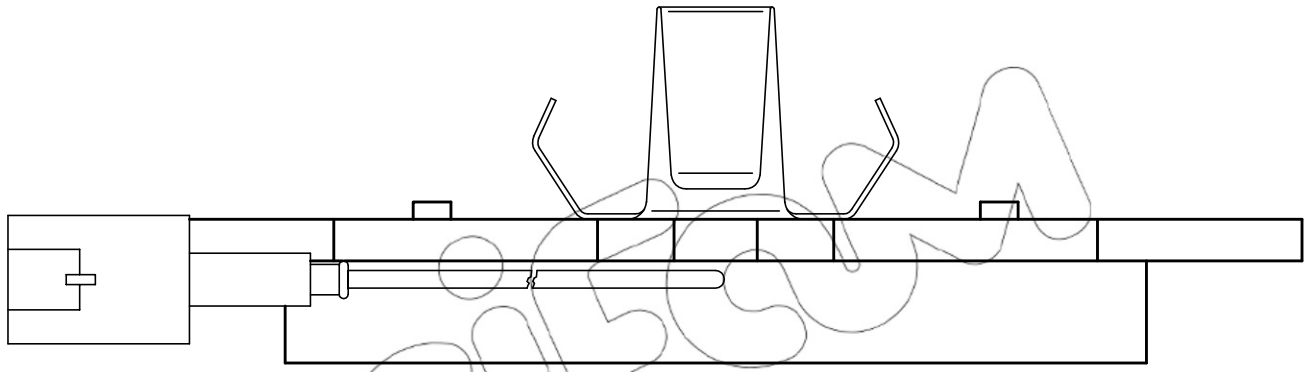
19

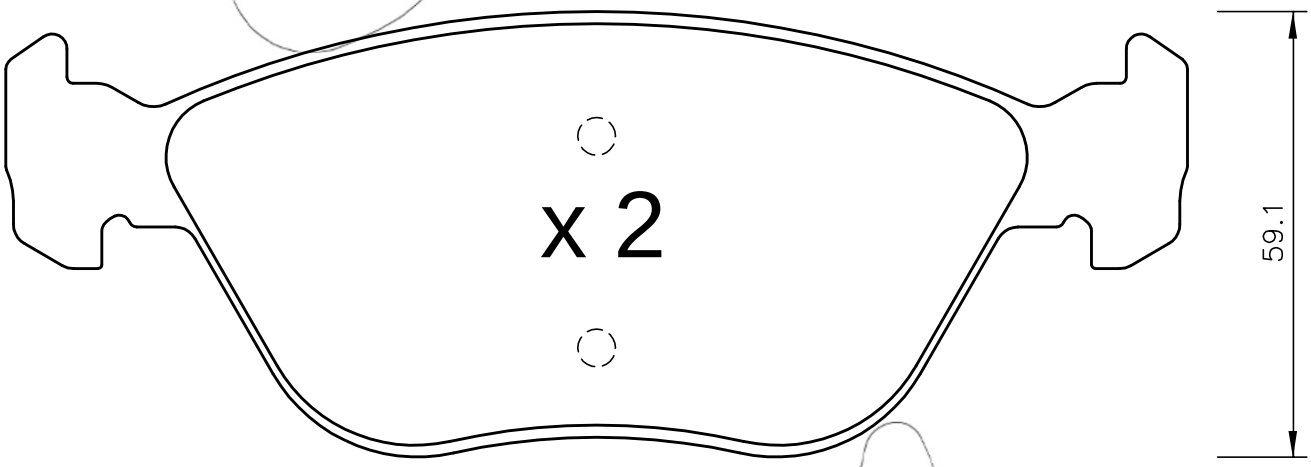
x 2
59.1

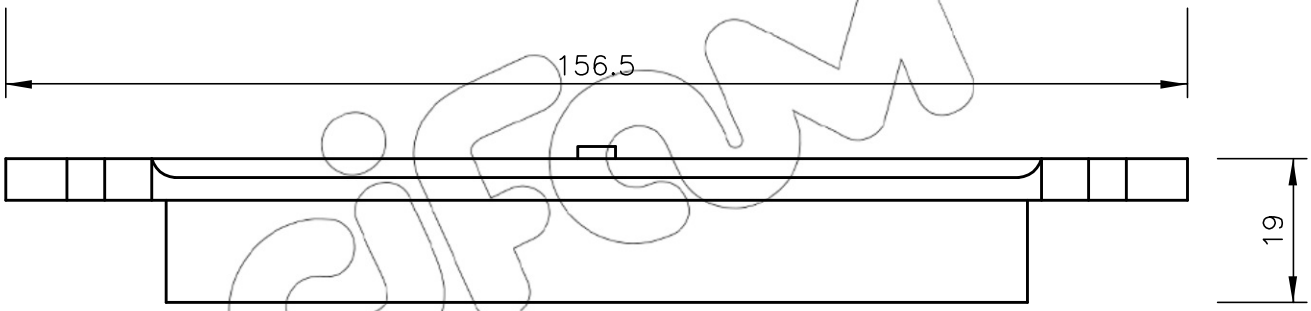
156.5
19