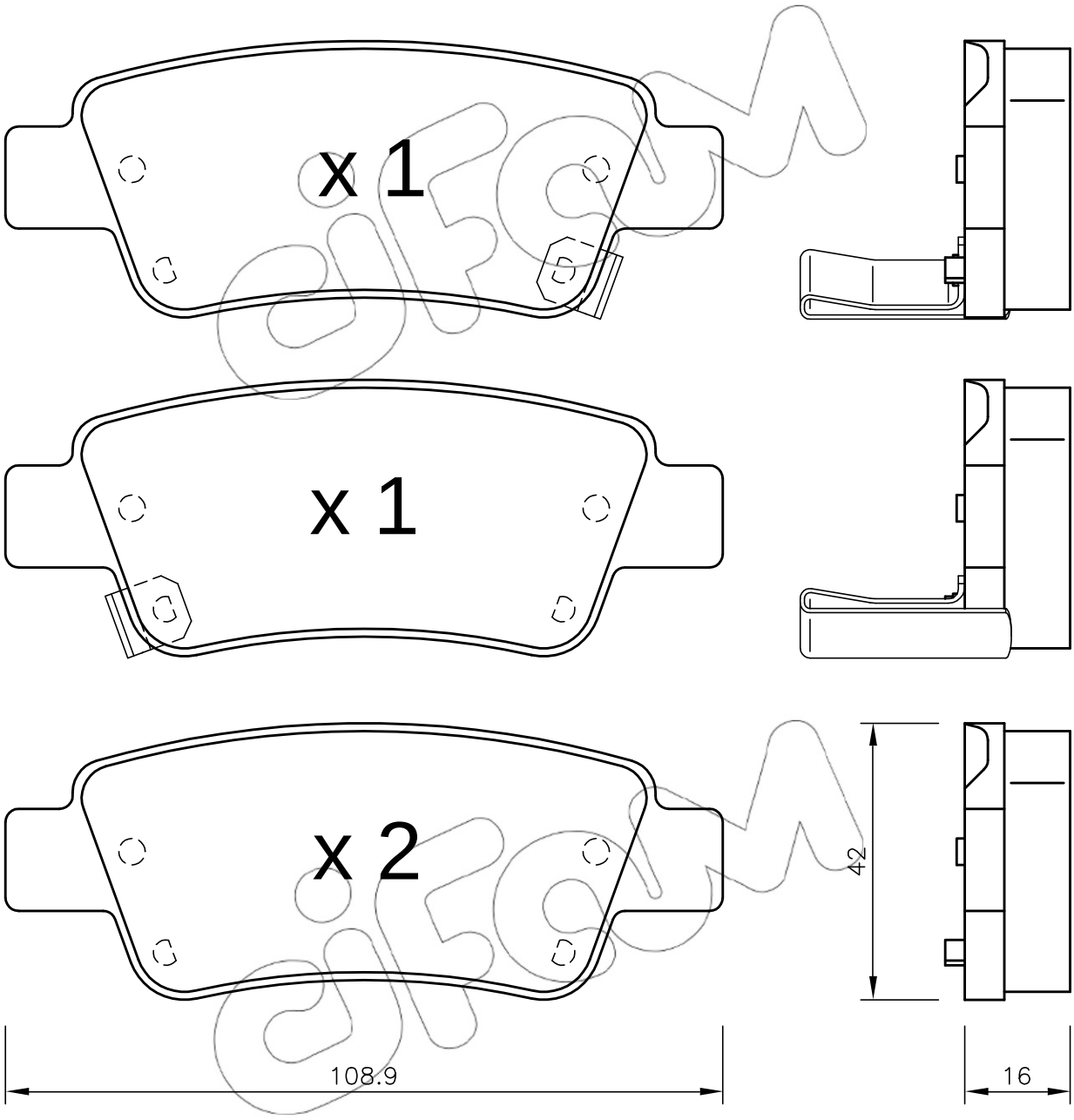
x 1
x 1
x 2
42
108.9
16